Item	Component	Material
1	Sample Cylinder	316L

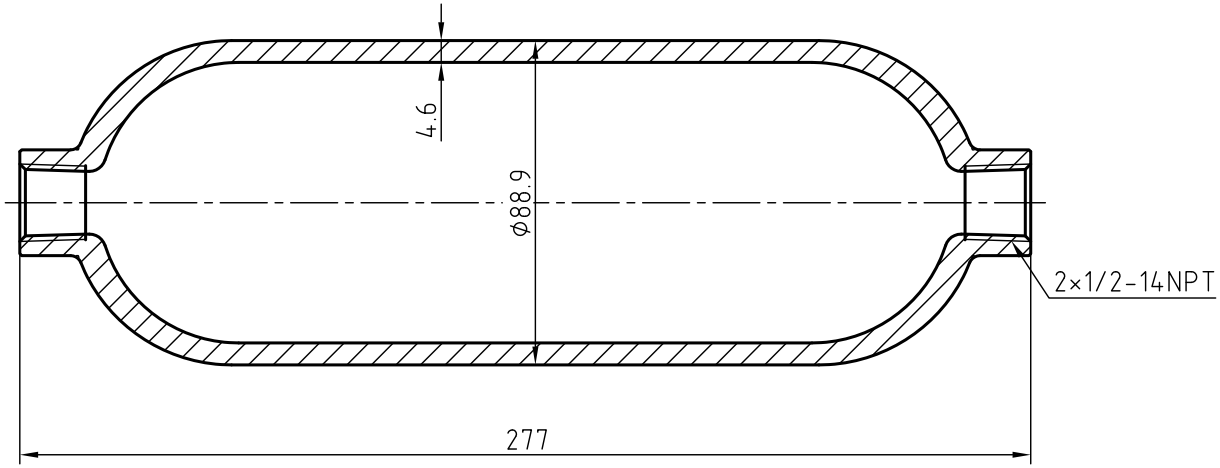

Features	
Maximum working pressure	1450psig(100bar)@-20~100°F(-29~38℃)
Working temperature	-65~850°F(-53~454℃)

NOTE: 1.Dimensions for reference only.
2. Cylinder compliant with TPED.

REV.	DATE	DRAWN	CHECKED

	NAME	DATE
DRAWN		
CHECKED		
APPROVED		

UNLESS OTHERWISE SPECIFIED ALL DIMENSIONS ARE IN MILLIMETER

FITOK

Sampling Cylinder

6L-SC10-N8-1000

REV. 1

DO NOT SCALE DRAWING

SHEET 1 OF 1